ARISTON

SI 300T 6KW

R8216120-01EN - Edition 01 - 17/12/2007

SI 300T 6KW

Storage Electric Water Heaters

Reference	Ind.	Model type	Begin	End
506 459		SI 300 T 6KW	...	...
381 0077		SI 300 T 6KW	...	...

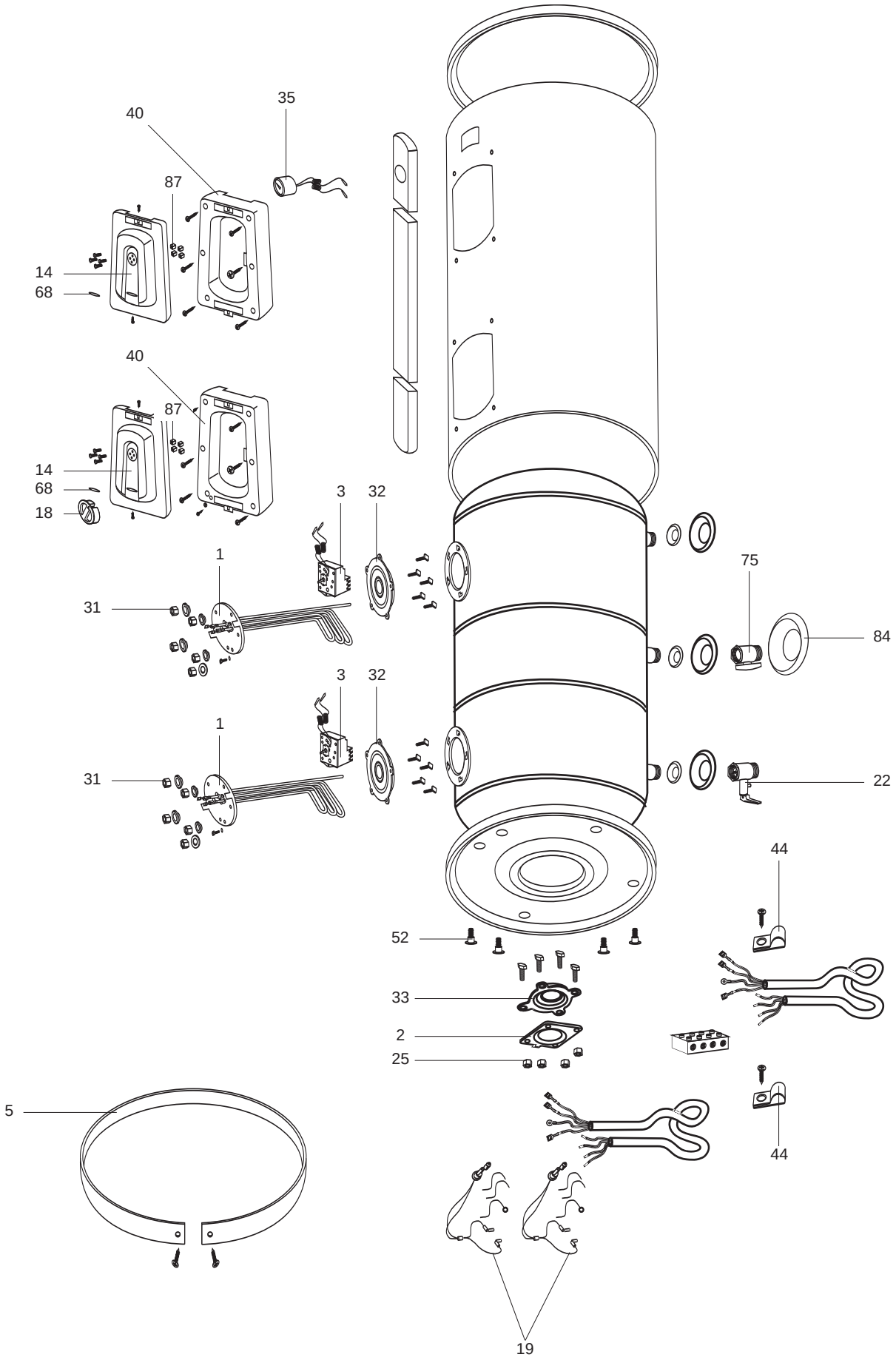
35
40
87
14
68
40
87
14
68
18
3
32
1
31
75
84
3
32
1
31
22
44
52
33
2
25
5
44
19

R8221901

Key№ / Позиция№	Description	Наименование	Code/Код	Type/Тип	T 300 - 6кВт		From / Начиная с	To / До
	17_12_2007							
0001	ELEMENT	ТЭН 3кВт (трехфазное подключение)	816092		*			
0002	JUNTA PLETINA	Крышка	65160119		*			
0003	THERMOSTAT COTHERM	Термостат	65100360		*			
0005	CLAMP	Хомут	65160120		*			
0014	INSPECTION COVER	Крыщка тэновой группы	65160110		*			
0018	KNOB	Ручка	65160112		*			
0019	WIRING	Электропроводка	65160122		*			
0022	SAFETY VALVE WITH LEVER	Предохранительный клапан	469446		*			
0025	LOCK NUT M6	Магниевый анод D:21,5 L:230 M5	994140		*			
0031	NUT M8	Гайка M8	65160081		*			
0032	FLANGE GASKET	Уплотнение фланца	65160118		*			
0033	FLANGE GASKET	Уплотнение фланца	65160116		*			
0035	THERMOMETER	Термоуказатель	65160102		*			
0040	BACK OUTER	Накладка	65160106		*			
0044	CABLE CLAMP	Кабельный зажим	508035		*			
0052	FOOT WITH NUT	Опора с крепежом	65160117		*			
0068	SIGNAL LAMP CAP	Светофильтр индикаторной лампы	65160111		*			
0075	BRASS TAP FOR DRAINING	Кран слива	65160128		*			
0084	TUBE RING BLACK 1 X 1/4	Накладка на патрубок черная 1 x 1/4	65160129		*			
0087	SPACER	Проставка	65160107		*			

LIST OF THE ABBREVATIONS

HW	**: Hot water.**
CW	**: Cold water.**
C	**: Ceramic resistance (normal heating).**
Ca	**: Ceramic resistance (accelerated heating)**
TP	**: Immersion heater.**
1F	**: With fittings.**
2F	**: Without fittings.**
3F	**: With fittings and another outlet connection.**
AMI	**: With mixing valve.**
SMI	**: Without mixing valve.**
PUISS	**: Power of th appliance.**
PN	**: Appliance with normal pression.**
LP	**: Appliance with low pression.**
PV	**: Appliance with variable power.**
PF	**: Appliance with fixed power..**

IDENTIFICATION PLATE

SERIAL NUMBER

Ex: SI-V-0B0 45 07 0001

- 0001 — Sequential number
- 07 — Year of manufacture :
  - 6 ➞ 2004
  - 7 ➞ 2005
  - 8 ➞ 2006
  - etc ...
- 45 — Month of manufacture :
  - 25 ➞ January
  - 13 ➞ February
  - 32 ➞ March
  - 35 ➞ April
  - 39 ➞ May
  - 45 ➞ June
  - 43 ➞ July
  - 29 ➞ August
  - 40 ➞ September
  - 38 ➞ October
  - 51 ➞ November
  - 12 ➞ December
- SI-V-0B0 — Product model

The indications mentionned on the prices, commercial or technical literature and the scheme are written for your guidance and are available at a given time. The CONSTRUCTOR retains the power to modify the presentation, the form, the size, the conception or the material of the products.